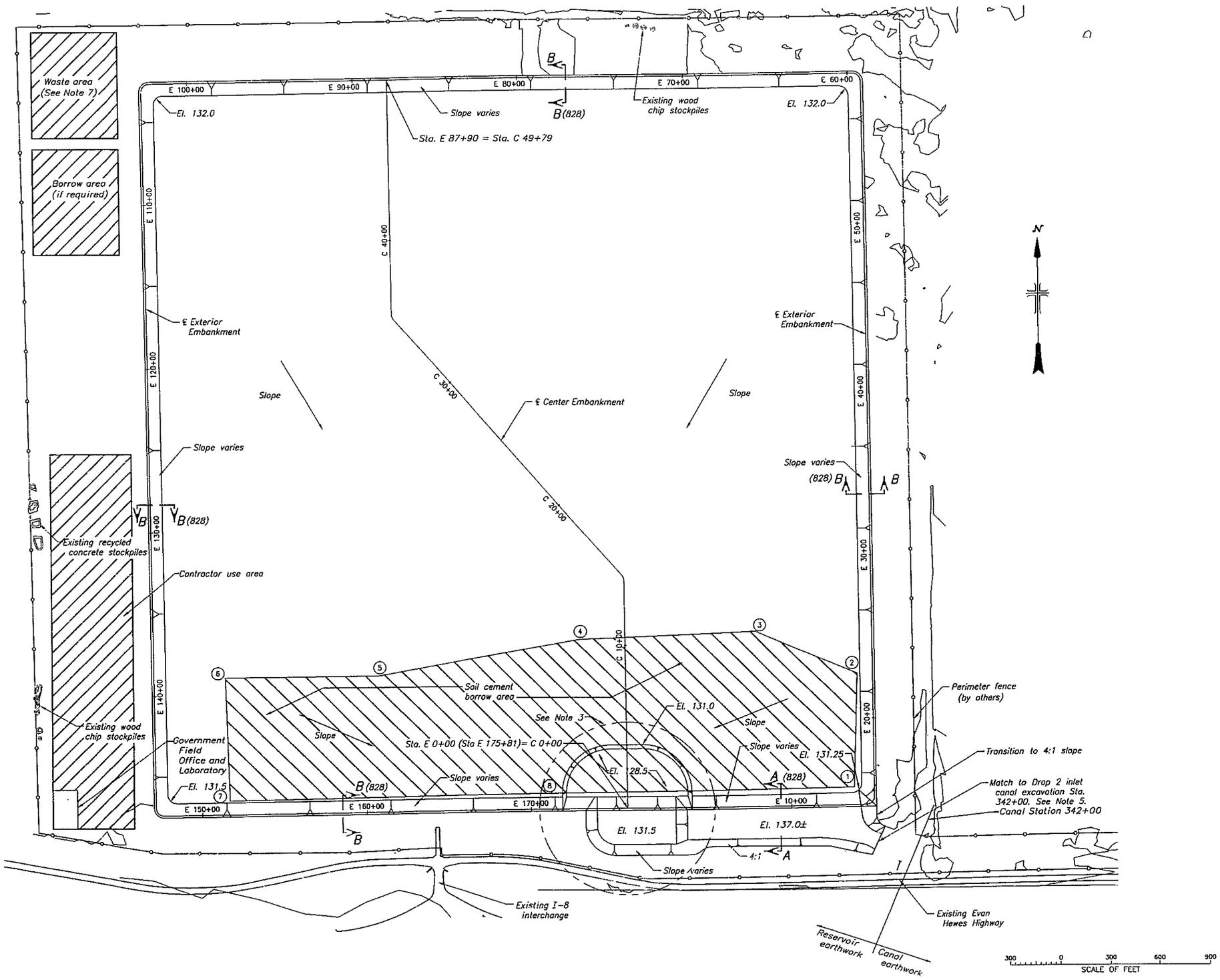

POINT TABLE FOR BOUNDARY OF SOIL CEMENT BORROW AREA

POINT NO.	NORTHING	EASTING
1	1,840,514	6,937,309
2	1,841,212	6,937,328
3	1,841,475	6,936,716
4	1,841,426	6,935,658
5	1,841,210	6,934,435
6	1,841,204	6,933,498
7	1,840,449	6,933,521
8	1,840,483	6,935,481

NOTES

1. Excavation for structures not shown.
2. Slope bottom of excavation toward inlet/outlet structure.
3. For detailed excavation plan of the forebay/afterbay & canal area see drawing 423-D-633.
4. See drawing 423-D-631 for location of embankment centerline.
5. See drawing 423-D-658 and 423-D-660 for canal details.
6. Perimeter fence to be constructed by others (future).
7. Powerlines not shown.
8. Rockfill stockpiles not shown. Stockpile located near contractor use area.
9. Stripping and soil cement stockpile areas to be located within contractor use area.
10. The materials within the soil cement borrow area contain sufficient fines content that meet requirements for soil cement.
11. If borrow area is not required, waste area can be expanded to include the designated borrow area.

REFERENCE DRAWINGS

RESERVOIR-GENERAL PLAN	423-D-631
RESERVOIR, FOREBAY/AFTERBAY & CANAL AREA DETAILED EXCAVATION-PLAN	423-D-633
RESERVOIR EMBANKMENT-TYPICAL CROSS-SECTIONS	423-D-638
STATION 335+00 TO STATION 356+71.14-PLAN AND PROFILE	423-D-658
TYPICAL CANAL SECTIONS-SECTIONS AND DETAILS	423-D-660
WASTEWAY CANAL-PLAN AND SECTION	423-D-661
CANAL WASTEWAY-SECTIONS AND DETAILS	423-D-662
RESERVOIR AREA SOIL CEMENT-EXPLORATION PLAN	423-D-763
RESERVOIR AND FOREBAY/AFTERBAY EXCAVATION-TYPICAL CROSS SECTION	423-D-828

REV NO		
1	2008-05-23 D-[illegible]	ADD WASTE AREA, ADD NOTE 11, DELINEATE RESERVOIR EARTHWORK FROM CANAL EARTHWORK. A. KIENE-TECH APPR.

ALWAYS THINK SAFETY

U.S. DEPARTMENT OF THE INTERIOR
BUREAU OF RECLAMATION

COLORADO RIVER FRONT WORK AND LEVEE SYSTEM - CALIFORNIA

DROP 2 STORAGE RESERVOIR CANAL AND STRUCTURES

RESERVOIR

GENERAL EXCAVATION PLAN

DESIGNED T. TOCHTROP CHECKED A. KIENE
DRAWN C. STRICKLAND TECH. APPR. A. KIENE
APPROVED B. ENGEMOEN

DENVER, COLORADO 2008-04-15 SHEET 1 OF 1

423-D-632

DATE AND TIME PLOTTED MAY 21, 2008 07:53
PLOTTED BY JWHITFIELD

CAD SYSTEM AutoCAD Rel. 17.1s
CAD FILENAME 423-D-632.DWG

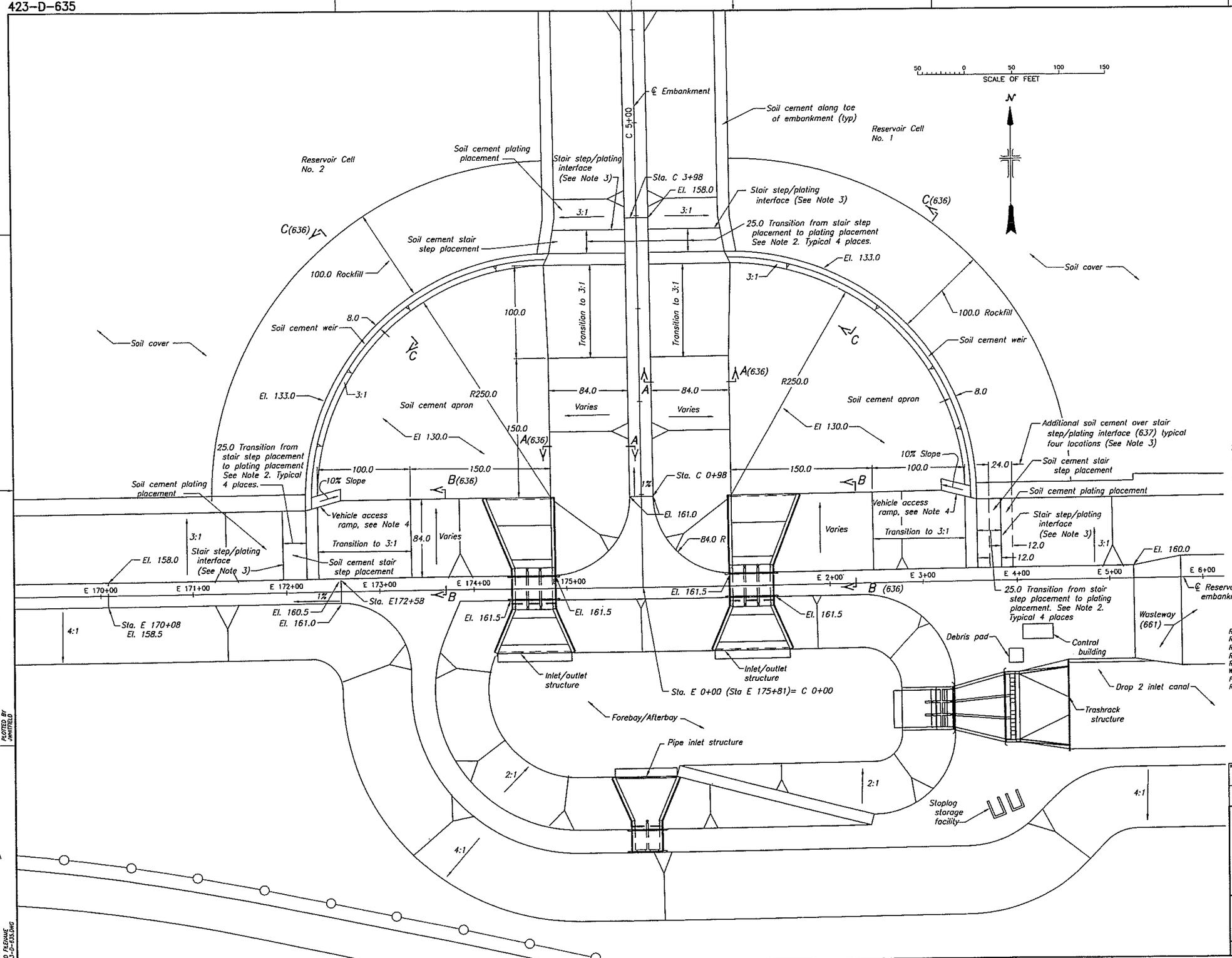

Soil Cement Apron 250' Radius Center Point Locations		
Cell 1	N 1840488.47	E 6936031.20
Cell 2	N 1840486.35	E 6935838.21

NOTES

1. All dimensions are in feet unless otherwise shown.
2. For details of transition see Detail 1 and 2 on drawing 423-D-637.
3. See Details 3 and 4 on drawing 423-D-637 for details of soil cement placement at stair step/plating interface.
4. Construct ramps using soil cement onto soil cement apron and soil cement weir for vehicle access. (2 locations). Slope at 10% from top of soil cement weir to top of soil cement apron. Construct ramp to minimum 12.0 width.
5. Locations of water level sensors not shown. See drawing 423-D-634.

REFERENCE DRAWINGS

RESERVOIR GENERAL PLAN	423-D-631
RESERVOIR GENERAL EXCAVATION PLAN	423-D-632
RESERVOIR & INLET/OUTLET AREA - SECTIONS	423-D-636
RESERVOIR & INLET/OUTLET AREA - DETAILS	423-D-637
RESERVOIR EMBANKMENT - TYPICAL CROSS SECTIONS	423-D-638
WASTEWAY CANAL SECTION AND PROFILE	423-D-661
FOREBAY/AFTERBAY GENERAL PLAN AND SECTIONS	423-D-698
RESERVOIR EMBANKMENT - TYPICAL INTERIOR SLOPE DETAILS	423-D-754

REV NO		
1	2008-05-23 0 -	REFERENCE 4 LOCATIONS WHERE ADDITIONAL SOIL CEMENT OVER STAIR STEP/PLATING INTERFACE OCCURS. ADD SLOPE LINES, DEFINE FEATURES. A. KIENE-TECH. APPR.

ALWAYS THINK SAFETY

U.S. DEPARTMENT OF THE INTERIOR
BUREAU OF RECLAMATION

COLORADO RIVER FRONT WORK AND LEVEE SYSTEM - CALIFORNIA

DROP 2 STORAGE RESERVOIR CANAL AND STRUCTURES

RESERVOIR AND INLET/OUTLET AREA

DETAILED PLAN

DESIGNED T. TOCHTROP CHECKED A. KIENE
DRAWN C. STRICKLAND TECH. APPR. A. KIENE
APPROVED B. ENGEMOEN

DENVER, COLORADO 2008-04-15 SHEET 1 OF 1

423-D-635

DATE AND TIME PLOTTED MAY 21, 2008 07:47
PLOTTED BY JWHITFIELD

CAD SYSTEM AutoCAD R14
CAD FILENAME 423-D-635.DWG

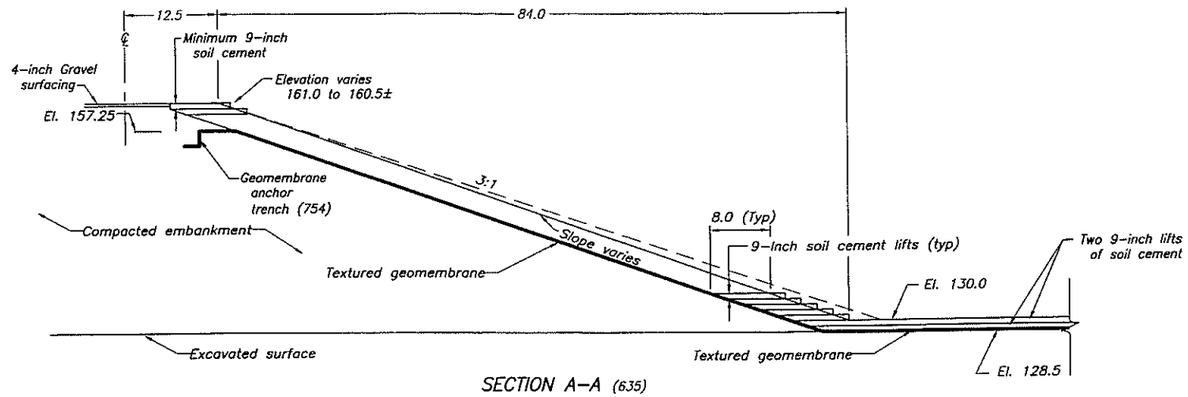

SECTION A–A (635)
CENTER EMBANKMENT
INLET/OUTLET STRUCTURE TO STA. C 3+48±

10 0 10 20 30
SCALE OF FEET

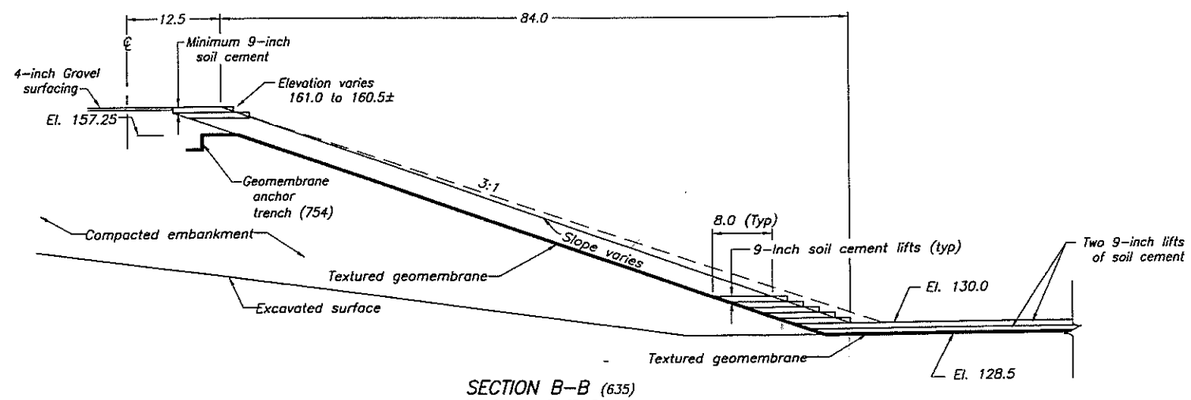

SECTION B–B (635)
STA. E 1+41± TO STA E 3+45±
STA. E 172+46± TO STA E 174+30±

10 0 10 20 30
SCALE OF FEET

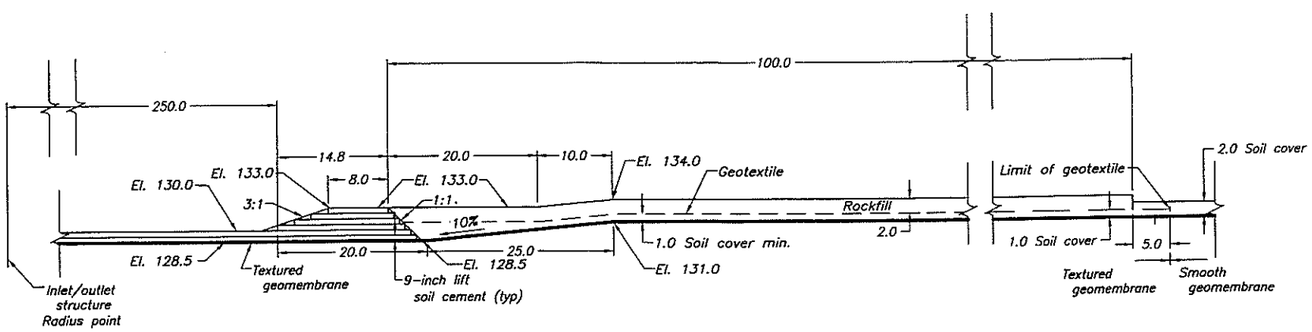

SECTION C–C (635)
SOIL CEMENT WEIR

10 0 10 20 30
SCALE OF FEET

NOTES

1. All dimensions are in feet, unless otherwise specified.
2. See drawing 423–D–754 for soil cement, geotextile, geonet composite, geomembrane and gravel filter placement details.
3. All stair step lifts not shown for clarity.

REFERENCE DRAWINGS

RESERVOIR GENERAL PLAN	423–D–631
RESERVOIR GENERAL EXCAVATION PLAN	423–D–632
RESERVOIR, FOREBAY/AFTERBAY CANAL AREA SECTIONS–DETAILED EXCAVATION PLAN	423–D–633
RESERVOIR & INLET/OUTLET AREA – DETAILED PLAN	423–D–635
RESERVOIR & INLET/OUTLET AREA – DETAILS	423–D–637
RESERVOIR EMBANKMENT – TYPICAL CROSS SECTIONS	423–D–638
RESERVOIR EMBANKMENT – TYPICAL INTERIOR SLOPE DETAILS	423–D–754

REV NO.		
1	2008–05–23 D – AL KIENE	REFERENCE RADIUS POINT ON SECTION C–C. AL KIENE–TECH. APPR.

ALWAYS THINK SAFETY

U.S. DEPARTMENT OF THE INTERIOR
BUREAU OF RECLAMATION

COLORADO RIVER FRONT WORK AND LEVEE SYSTEM – CALIFORNIA

DROP 2 STORAGE RESERVOIR CANAL AND STRUCTURES

RESERVOIR AND INLET/OUTLET AREA

SECTIONS

DESIGNED T. TOCHTROP CHECKED A. KIENE
DRAWN C. STRICKLAND TECH. APPR. A. KIENE
APPROVED B. ENGEMOEN

DENVER, COLORADO SHEET 1 OF 1 2008–04–15

423–D–636

DATE AND TIME PLOTTED MAY 21, 2008 07:44
PLOTTED BY JWHITFIELD

CAD SYSTEM AutoCAD Rel. 17.1s
CAD FILENAME 423–D–636.DWG

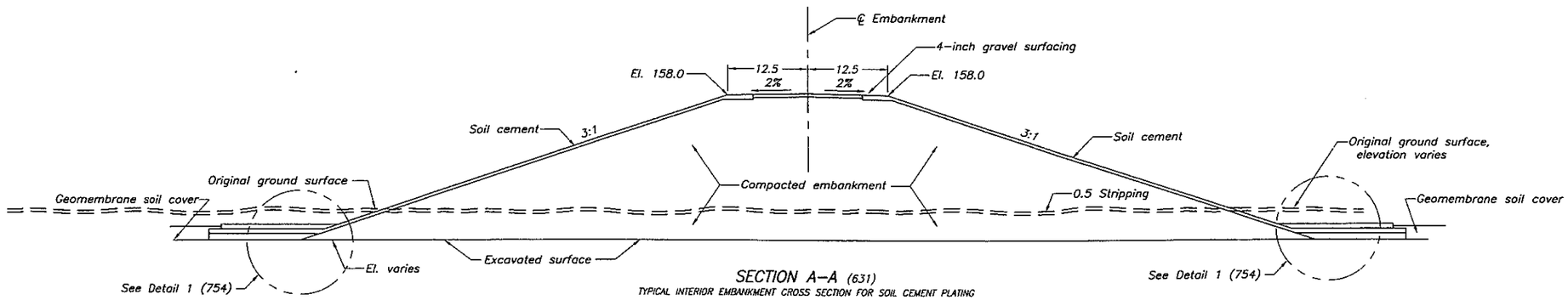

SECTION A–A (631)

TYPICAL INTERIOR EMBANKMENT CROSS SECTION FOR SOIL CEMENT PLATING

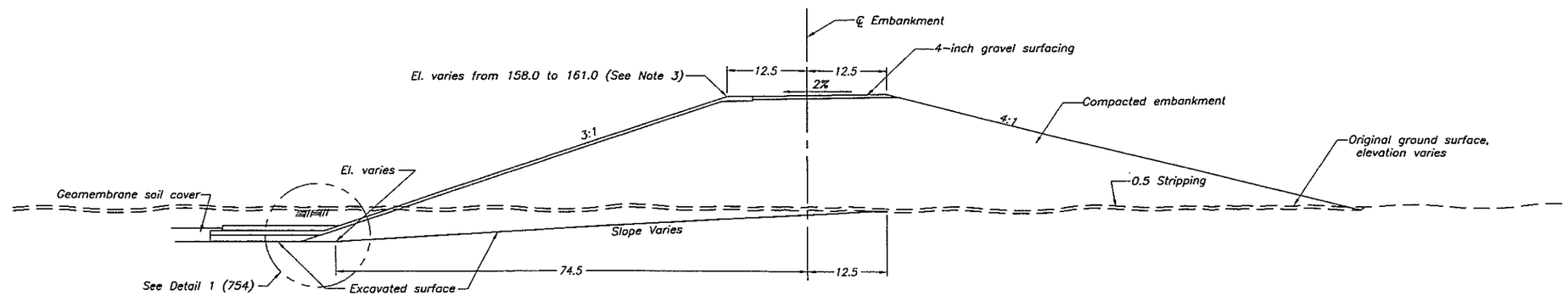

SECTION B–B (631)

TYPICAL EXTERIOR EMBANKMENT CROSS SECTION FOR SOIL CEMENT PLATING

10 0 10 20 30
SCALE OF FEET

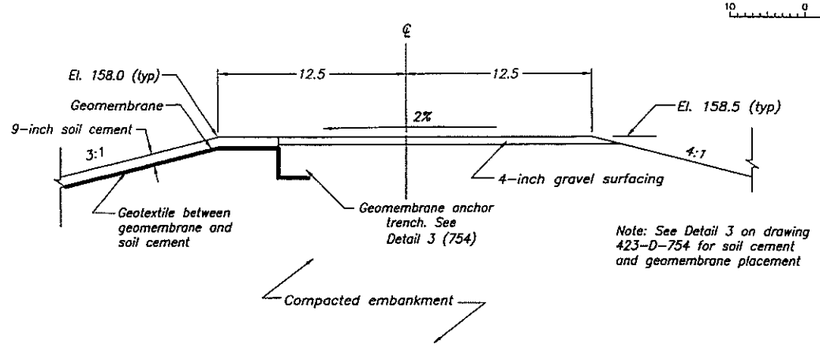

TYPICAL CREST DETAIL EXTERIOR EMBANKMENT

(NOT TO SCALE)

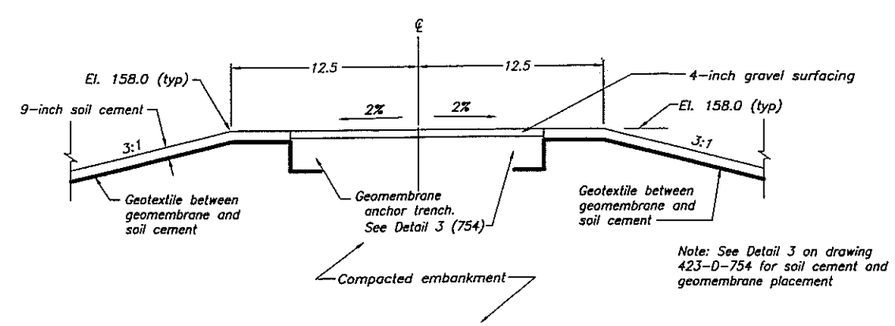

CREST DETAIL INTERIOR EMBANKMENT

(NOT TO SCALE)

NOTES

1. All dimensions are in feet, unless otherwise specified.
2. See drawing 423-D-754 for soil cement, geotextile, geonet composite, geomembrane and gravel filter placement details.
3. Majority of crest is at elevation 158.0 except in Reservoir Forebay/Afterbay area. See drawing 423-D-634.

REFERENCE DRAWINGS

RESERVOIR GENERAL PLAN	423-D-631
RESERVOIR GENERAL EXCAVATION PLAN	423-D-632
RESERVOIR SOUTHEAST EMBANKMENT PLAN	423-D-634
RESERVOIR EMBANKMENT – TYPICAL INTERIOR SLOPE DETAILS	423-D-754

ALWAYS THINK SAFETY

U.S. DEPARTMENT OF THE INTERIOR
BUREAU OF RECLAMATION

COLORADO RIVER FRONT WORK AND LEVEE SYSTEM – CALIFORNIA

DROP 2 STORAGE RESERVOIR
CANAL AND STRUCTURES

RESERVOIR EMBANKMENT
TYPICAL CROSS SECTIONS

DESIGNED _____ CHECKED _____
DRAWN _____ TECH. APPR. _____
APPROVED _____

DENVER, COLORADO SHEET 1 OF 1 2008-04-15 423-D-638

DATE AND TIME PLOTTED 2008/04/15 15:22
PLOTTED BY JAHNFIELD

CAD SYSTEM AutoCAD R14
CAD FILENAME 423-D-638.DWG

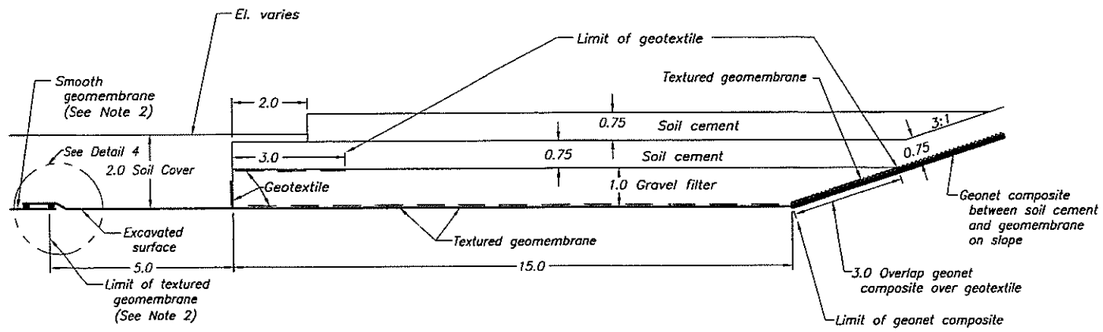

DETAIL 1
(NOT TO SCALE)

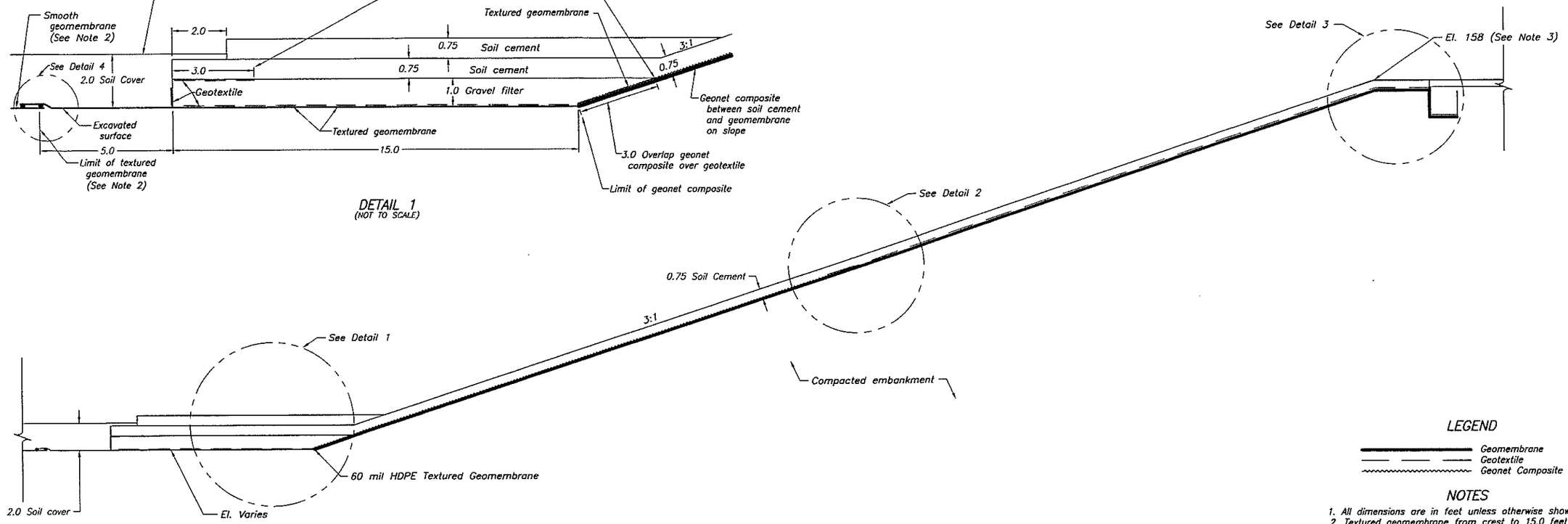

TYPICAL EMBANKMENT SLOPE DETAIL
FOR PLATING SOIL CEMENT
(NOT TO SCALE)

LEGEND

- Geomembrane
- Geotextile
- Geonet Composite

NOTES

1. All dimensions are in feet unless otherwise shown.
2. Textured geomembrane from crest to 15.0 feet from toe of slope and in other areas as shown on the drawings. Smooth geomembrane in reservoir bottom.
3. Majority of crest is at elevation 158.0 except in reservoir/afterbay area. See drawing 423-D-634.

REFERENCE DRAWINGS

RESERVOIR SOUTHEAST EMBANKMENT PLAN 423-D-634
RESERVOIR & INLET/OUTLET AREA – SECTIONS 423-D-636
RESERVOIR EMBANKMENT – TYPICAL CROSS SECTIONS 423-D-639
FOREBAY/AFTERBAY GENERAL PLAN AND SECTIONS 423-D-698
FOREBAY/AFTERBAY EMBANKMENT – TYPICAL SECTIONS AND GEOMEMBRANE ANCHOR DETAILS 423-D-755

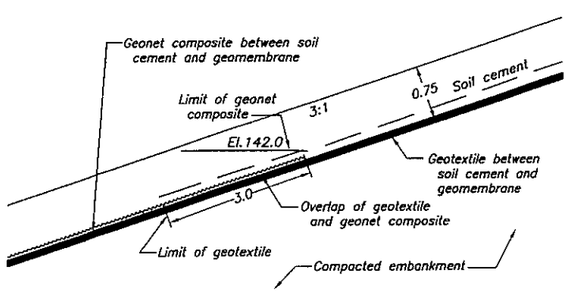

DETAIL 2
(NOT TO SCALE)

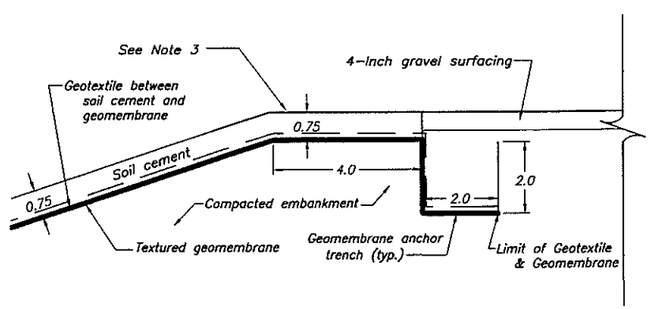

DETAIL 3
(NOT TO SCALE)

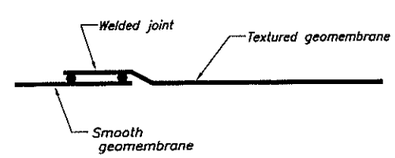

DETAIL 4
(NOT TO SCALE)

ALWAYS THINK SAFETY

U.S. DEPARTMENT OF THE INTERIOR
BUREAU OF RECLAMATION

COLORADO RIVER FRONT WORK AND LEVEE SYSTEM – CALIFORNIA

DROP 2 STORAGE RESERVOIR
CANAL AND STRUCTURES

RESERVOIR EMBANKMENT

TYPICAL INTERIOR SLOPE DETAILS

DESIGNED ..... CHECKED .....
DRAWN ..... TECH. APPR. .....
APPROVED .....

DENVER, COLORADO SHEET 1 OF 1 2008-04-15 423-D-754

DATE AND TIME PLOTTED APRIL 15, 2008 07:57
PLOTTED BY JWHITFIELD

CAD SYSTEM AutoCAD Rel. 17.1s
CAD FILENAME 423-D-754.DWG